31-8.1-BK

Roman Tub Set with Diverter and Handshower

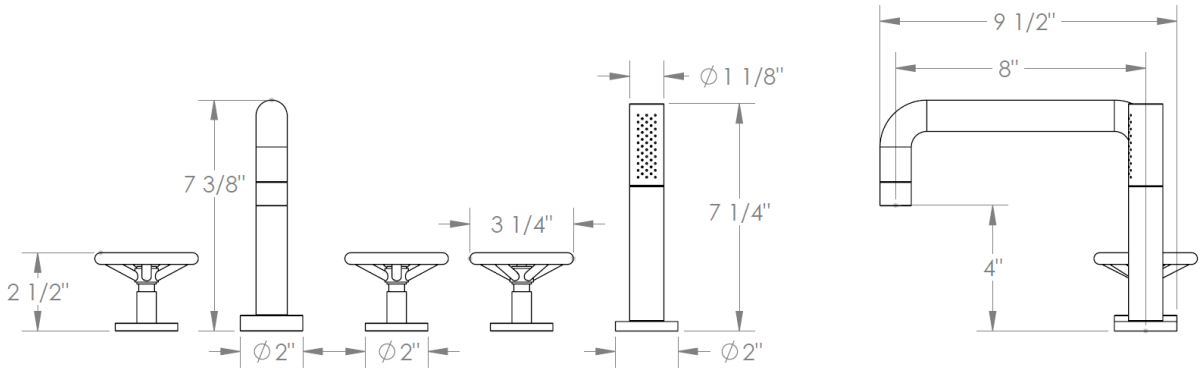

Meets the applicable requirements of ASME A112.18.1-2005/CSA B125.1-05, entitled “Plumbing Supply Fittings”

WATERMARK DESIGNS 10/21/2014

350 Dewitt Ave Brooklyn NY 11207 USA T 718 257 2800 F 718 257 2144 info@watermark-designs.com